TABLE OF CONTENTS

Cover Page 1
Acknowledgement 2
Certificate 3
Abstract 4–5

CHAPTER – 1: INTRODUCTION

Introduction 6
Motivation 6–7
Scope of Study 7–8
Objectives 8–9
Significance 9–10

CHAPTER – 2: LITERATURE SURVEY

Smart Pedestrian Crossing Systems 11
Projection-Based Road Safety Systems 11–12
Smart Traffic Signal Control Systems 12
Integrated Smart Traffic Systems 12–13
Research Gap 13

CHAPTER – 3: PROPOSED SOLUTION

System Overview and Implementation Framework 14
Hardware Components and Pin Configuration 14–15
System Architecture Design 16
Control Logic and Working Algorithm 16–18
System Operation and Performance Analysis 20
Display and Monitoring System 20–21
System Functionality Summary 21

CHAPTER – 4: PENDING WORK & FUTURE SCOPE

Limitations and Pending Work 22–23
Future Scope 23–24

CHAPTER – 5: CONCLUSION

Conclusion 25
Key Accomplishments 25–26
Broader Impact and Significance 26
Final Recommendation 26–27

References 27–2

ABSTRACT

Rapid urbanization and increasing vehicular density have intensified the challenges of pedestrian safety and efficient traffic management, particularly during night-time conditions when visibility is significantly reduced. Conventional pedestrian crossings rely on static road markings and fixed-timing traffic signals, which often fail to adapt to real-time traffic conditions or provide adequate visibility in low-light environments. To address these limitations, this project proposes the design and development of an **intelligent night-time crosswalk projection and adaptive traffic signal control system**, integrating sensor-based automation with real-time decision-making.

The proposed system is built on an embedded platform using a microcontroller-based architecture, where multiple sensors and output components work in coordination to simulate a smart traffic environment. An Infrared (IR) sensor is employed to detect the presence of vehicles, enabling the system to respond dynamically to traffic conditions. Simultaneously, a Light Dependent Resistor (LDR) is used to monitor ambient light intensity and determine whether it is day or night. These inputs are continuously processed by the controller to make real-time decisions regarding traffic signal transitions and crosswalk activation.

The system operates through a structured control mechanism that mimics real-world traffic behavior. Under normal conditions, the traffic signal remains green, allowing vehicles to pass. Upon detection of a vehicle or traffic condition requiring control, the system initiates a transition sequence from green to yellow and then to red, ensuring safe and orderly traffic movement. During this phase, if the environment is identified as low-light or night-time, a projection module is activated to display a visible crosswalk on the road surface. This dynamic projection enhances pedestrian visibility and driver awareness, thereby improving safety compared to conventional static crossings. In contrast, during daytime conditions, the projection system remains inactive, ensuring energy-efficient operation.

To enhance system transparency and monitoring, a liquid crystal display (LCD) interface is incorporated, which provides real-time information such as traffic signal status, vehicle detection, and environmental conditions (day/night). This human-machine interaction component makes the system more user-friendly and suitable for practical deployment and demonstration.

The project aligns with ongoing research in intelligent transportation systems, smart crosswalk technologies, and projection-based road communication. By combining sensor-driven automation with adaptive traffic signal control, the system demonstrates a scalable and cost-effective approach to modern traffic management. It reflects key principles of IoT-based smart infrastructure, where devices interact with their environment and respond intelligently to changing conditions.

The proposed model offers several advantages, including improved pedestrian safety during night-time, optimized traffic flow through adaptive signalling, reduced energy consumption via conditional activation, and low implementation cost using readily available hardware components. However, the system is subject to certain limitations, such as dependency on sensor accuracy and environmental factors affecting projection visibility. Future enhancements may include integration with artificial intelligence for predictive traffic analysis, multi-intersection coordination, and communication with smart city networks.

In conclusion, this project presents a practical and innovative solution that bridges the gap between traditional traffic systems and next-generation smart transportation technologies. By dynamically projecting crosswalks and intelligently controlling traffic signals based on real-time conditions, the system contributes toward safer, more efficient, and sustainable urban mobility.

CHAPTER – 1: INTRODUCTION

INTRODUCTION:

With the rapid growth of urban populations and the continuous increase in vehicular traffic, ensuring pedestrian safety and efficient traffic management has become a major challenge in modern cities. Traditional traffic systems rely heavily on fixed-timing signals and static pedestrian crossings, which do not adapt to real-time traffic conditions or environmental changes. This limitation becomes more critical during night-time or low-light conditions, where reduced visibility increases the risk of accidents involving pedestrians. Painted crosswalks and conventional signals often fail to provide sufficient visual cues to both drivers and pedestrians, leading to unsafe crossing situations.

In recent years, advancements in embedded systems and intelligent transportation technologies have opened new possibilities for developing adaptive and automated traffic solutions. Sensor-based systems, combined with real-time processing, allow traffic infrastructure to respond dynamically to environmental conditions and user behavior. Technologies such as Infrared (IR) sensors enable vehicle detection, while Light Dependent Resistors (LDR) can be used to assess ambient lighting conditions. These components form the basis of smart systems that can operate autonomously without constant human intervention.

This project presents the design and implementation of an intelligent traffic management model that integrates dynamic crosswalk projection with adaptive traffic signal control. The system uses an IR sensor to detect vehicle presence and an LDR to determine whether it is day or night. Based on these inputs, the system controls traffic lights in a structured sequence (green, yellow, red) and activates a projection-based crosswalk during night-time conditions. The projected crosswalk enhances visibility and provides a clear indication for pedestrian movement, thereby improving safety. Additionally, the system incorporates a display interface to provide real-time information about traffic conditions and system status.

By combining sensor-based automation with conditional logic and embedded control, the proposed system demonstrates a practical approach toward intelligent and responsive traffic infrastructure. It serves as a prototype for future smart city applications, where traffic systems are capable of adapting to real-world conditions and ensuring both safety and efficiency in urban mobility.

MOTIVATION:

The primary motivation behind this project arises from the increasing number of road accidents involving pedestrians, especially during night-time when visibility is poor and driver awareness is reduced. In many urban and semi-urban areas, pedestrian crossings are either not clearly visible or are ignored due to inadequate signalling systems. Fixed traffic signals, which operate without considering real-time traffic conditions, often lead to unnecessary waiting times, congestion, and unsafe crossing behaviour.

Another key motivation is the lack of intelligent and cost-effective traffic solutions in developing regions. While advanced traffic management systems exist, they are often expensive and require complex infrastructure, making them difficult to implement on a large scale. There is a need for a simple, scalable, and affordable system that can enhance both pedestrian safety and traffic efficiency using readily available components.

The idea of dynamically projecting a crosswalk during night-time is inspired by emerging research in projection-based communication and smart road systems. Unlike traditional painted crossings, a projected crosswalk is visible only when required and can adapt to environmental conditions, making it both energy-efficient and effective. Integrating this concept with sensor-based traffic control provides a unique solution that addresses multiple challenges simultaneously.

Furthermore, the project is motivated by the growing importance of smart cities and intelligent transportation systems. Developing a model that combines real-time sensing, automated decision-making, and user interaction aligns with the future direction of urban infrastructure. This project not only demonstrates technical feasibility but also highlights how simple embedded systems can contribute to solving real-world problems.

In essence, the motivation is to create a system that is safer, smarter, and more efficient than traditional methods, while remaining practical and accessible for real-world implementation.

SCOPE OF STUDY

The scope of this project focuses on the design and implementation of a **sensor-based intelligent traffic management system** that enhances pedestrian safety and optimizes traffic flow, particularly during night-time conditions. The system is developed as a prototype using embedded technology and aims to simulate real-world traffic behaviour through automation and conditional control.

This study primarily covers the integration of sensors, signal control logic, and projection-based crosswalk activation within a controlled environment. It demonstrates how real-time inputs from environmental and traffic conditions can be processed to produce adaptive outputs.

The scope includes the following key aspects:

- Detection of vehicle presence using Infrared (IR) sensors
- Identification of day and night conditions using LDR sensor readings
- Automated control of traffic signals (Red, Yellow, Green) based on real-time inputs
- Activation of a projection-based crosswalk system during low-light conditions
- Display of system status using an LCD interface for monitoring and interaction

In addition to implementation, the study also considers basic system behaviour analysis, including response to different traffic scenarios and environmental conditions. The focus is on creating a functional and efficient prototype rather than a full-scale deployment.

However, the project is limited to a hardware-based model and does not include advanced features such as artificial intelligence, large-scale multi-intersection networking, or real-time data communication with external systems. These aspects are considered beyond the current scope and are proposed as future enhancements.

OBJECTIVES

The main objective of this project is to design and develop an **intelligent traffic management system** that enhances pedestrian safety and improves traffic flow using sensor-based automation and dynamic control mechanisms. The system aims to provide a practical and efficient solution for real-time traffic conditions, especially during night-time.

The specific objectives of the project are as follows:

- To design a prototype model that integrates traffic signal control with crosswalk projection
- To detect vehicle presence using an Infrared (IR) sensor for real-time traffic response
- To determine environmental lighting conditions using an LDR sensor for day and night identification
- To implement an automated traffic signal sequence (Green → Yellow → Red) based on sensor inputs
- To activate a projection-based crosswalk system during night-time conditions for improved pedestrian visibility
- To develop a user interface using an LCD display to show system status and conditions
- To ensure efficient and energy-saving operation by activating components only when required
- To create a scalable and cost-effective system suitable for future smart city applications

These objectives collectively aim to demonstrate how embedded systems and sensor-based technologies can be used to build safer, smarter, and more responsive traffic management solutions.

SIGNIFICANCE

The proposed project holds significant importance in the field of intelligent transportation systems, embedded systems, and smart city infrastructure. With the increasing number of vehicles on roads and the rising concern for pedestrian safety, especially during night-time, there is a strong need for adaptive and reliable traffic management solutions. This project addresses these challenges by introducing a system that responds dynamically to both traffic conditions and environmental factors.

The significance of this study can be understood through the following points:

- **Enhancement of Pedestrian Safety:**
  The dynamic projection of crosswalks during low-light conditions improves visibility for both pedestrians and drivers, reducing the chances of accidents and unsafe crossings.
- **Adaptive Traffic Management:**
  Unlike conventional fixed-timing signals, the system responds to real-time vehicle detection, ensuring smoother and more efficient traffic flow.
- **Energy Efficiency:**
  The projection system operates only during night-time and when required, minimizing unnecessary power consumption and promoting sustainable operation.
- **Cost-Effective Implementation:**
  The use of simple components such as Arduino, IR sensors, and LDR makes the system affordable and suitable for deployment in developing regions.
- **Foundation for Smart City Systems:**
  The project demonstrates key concepts of automation, real-time decision-making, and sensor integration, which are essential for future smart transportation infrastructure.
- **Improved Human-Machine Interaction:**
  The inclusion of an LCD display allows users to monitor system status, making the system more transparent and user-friendly.

Overall, this project contributes toward the development of safer, smarter, and more efficient urban mobility solutions. It highlights how low-cost embedded systems can be effectively utilized to solve real-world problems and lays the groundwork for further advancements in intelligent traffic control technologies.

CHAPTER – 2: LITERATURE SURVEY

2.1 Smart Pedestrian Crossing Systems

The development of pedestrian crossing systems has evolved significantly from traditional static zebra crossings to more advanced smart systems. Conventional crossings rely on painted road markings and fixed signals, which often become less visible over time and are particularly ineffective during night-time or adverse weather conditions. Studies have shown that poor visibility and lack of driver awareness are major contributors to pedestrian-related accidents, especially in low-light environments.

To address these issues, researchers have introduced **smart pedestrian crossing systems** that utilize sensors such as Infrared (IR), ultrasonic sensors, and cameras to detect pedestrian presence. These systems activate warning signals or embedded LED lights on the road surface to alert drivers. In some implementations, flashing lights are embedded within the pavement, improving visibility and increasing driver response rates. Such systems have demonstrated improvements in pedestrian safety and driver compliance.

However, despite these advancements, most existing smart crossings are either continuously active or rely on fixed infrastructure, leading to increased energy consumption and limited adaptability. Additionally, these systems often lack integration with traffic signals, reducing their effectiveness in managing both pedestrian movement and vehicular flow simultaneously. This highlights the need for more dynamic and integrated solutions.

2.2 Projection-Based Road Safety Systems

Recent research has explored **projection-based communication systems** as an innovative approach to improving road safety. These systems involve projecting visual signals, such as crosswalks or warning indicators, directly onto the road surface. This concept is particularly relevant in the context of autonomous vehicles, where projected signals are used to communicate intentions to pedestrians and other road users.

Studies indicate that projection-based systems significantly enhance visibility and provide intuitive visual cues, especially during night-time conditions. Unlike traditional LED-based systems, projection allows for dynamic and context-aware display of information, which can be activated only when necessary. This not only improves safety but also contributes to energy efficiency.

Furthermore, projection-based systems offer flexibility in design, enabling the display of different patterns or signals based on real-time conditions. Research has demonstrated that pedestrians are more likely to trust and respond to clearly visible projected signals compared to static markings. However, these systems are still largely in the experimental or prototype stage and are not widely implemented in real-world scenarios due to cost and infrastructure limitations.

Despite these challenges, projection-based road communication represents a promising direction for future traffic systems. The concept of dynamically projecting a crosswalk, as implemented in this project, is aligned with these emerging research trends and provides a practical approach using low-cost components.

2.3 Smart Traffic Signal Control Systems

Traditional traffic signal systems operate on fixed timing mechanisms, which do not account for real-time traffic conditions. This often leads to inefficient traffic flow, increased waiting times, and congestion, particularly during peak hours. To overcome these limitations, researchers have developed **adaptive traffic signal control systems** that use sensors, cameras, and artificial intelligence to monitor traffic and adjust signal timings dynamically.

Modern intelligent traffic systems employ various techniques, including vehicle detection sensors, machine learning algorithms, and multi-agent coordination, to optimize traffic flow across multiple intersections. Studies have reported significant reductions in travel time, fuel consumption, and congestion levels when adaptive signal control is implemented. These systems are capable of prioritizing high-density traffic lanes and synchronizing signals across intersections for smoother traffic movement.

However, many of these advanced systems require complex infrastructure, high computational resources, and extensive data collection, making them expensive and difficult to deploy in developing regions. Additionally, most systems focus primarily on vehicular traffic optimization and do not adequately address pedestrian safety, especially under varying environmental conditions.

This creates a need for simpler, cost-effective solutions that can provide adaptive traffic control while also incorporating pedestrian safety mechanisms.

2.4 Integrated Smart Traffic and Pedestrian Systems

Recent advancements in intelligent transportation systems have attempted to integrate pedestrian safety with traffic management. These systems combine features such as pedestrian detection, adaptive signaling, and warning mechanisms to create a more comprehensive traffic control solution. Some research efforts have focused on using IoT-based architectures where sensors and controllers communicate in real time to manage both pedestrian and vehicular movement.

While these integrated systems show promising results, they often rely on advanced technologies such as computer vision, cloud computing, and large-scale data processing. As a result, they tend to be costly and complex, limiting their practical implementation in many

regions. Moreover, most existing systems utilize LED indicators or signal-based alerts rather than projection-based solutions, which may not provide sufficient visibility in all conditions.

Another limitation observed in the literature is the lack of energy-efficient operation. Many systems remain active continuously, regardless of environmental conditions or actual need, leading to unnecessary power consumption.

Research Gap

From the above literature, it is evident that significant progress has been made in the areas of smart pedestrian crossings, projection-based communication, and adaptive traffic signal control. However, most existing systems focus on individual aspects rather than providing a unified solution. Smart crossings improve visibility but lack adaptability, while adaptive traffic systems optimize flow but often overlook pedestrian safety.

Additionally, projection-based systems, although highly effective, are still not widely implemented due to cost and complexity, and there is limited work on integrating them with traffic signal control in a simple and scalable manner.

Therefore, there exists a clear research gap in developing a **low-cost, sensor-based system that integrates dynamic crosswalk projection with adaptive traffic signal control**, particularly for night-time conditions. The proposed project addresses this gap by combining these features into a single, efficient, and practical model, contributing toward the development of smarter and safer transportation systems.

CHAPTER – 3: PROPOSED SOLUTION

3.1 System Overview and Implementation Framework

The proposed system is an embedded, real-time intelligent traffic management system designed to enhance pedestrian safety and improve traffic flow, particularly during night-time conditions. The system integrates vehicle detection, environmental sensing, adaptive traffic signal control, and crosswalk projection into a single automated framework. It operates continuously by collecting inputs from sensors, processing them using a microcontroller, and generating appropriate outputs.

The system is divided into the following modules:

- **Input Module:** IR sensor (vehicle detection), LDR sensor (light detection)
- **Processing Module:** Arduino Uno microcontroller
- **Output Module:** Traffic LEDs, projection unit, and LCD display

This modular structure ensures efficient operation, real-time response, and easy scalability.

3.2 Hardware Components and Pin Configuration

The system consists of several hardware components connected to specific Arduino pins. Proper pin configuration ensures accurate data acquisition and reliable system performance.

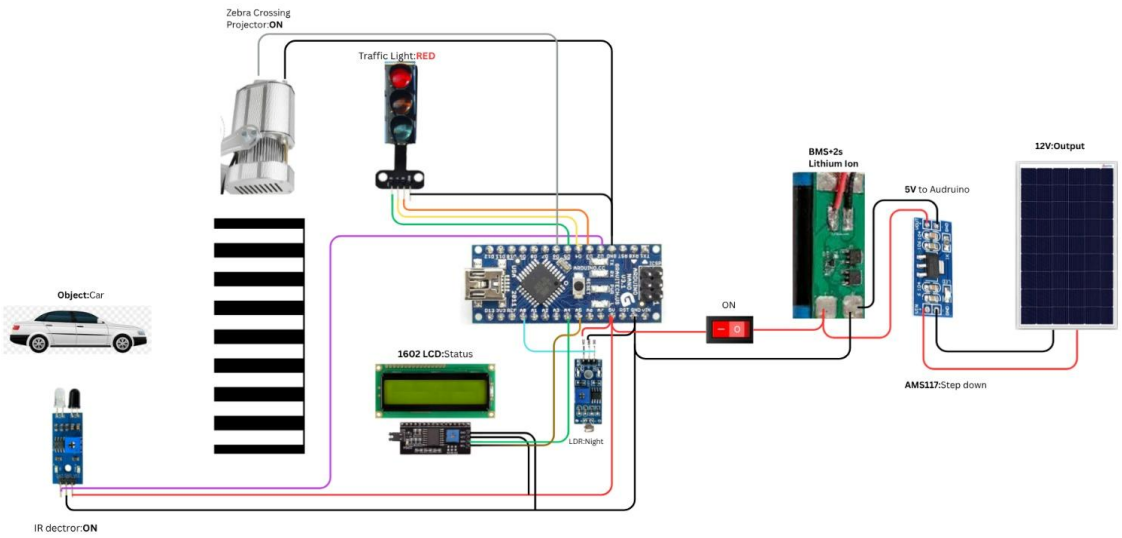

Arduino Uno Microcontroller

The Arduino Uno is the main controller of the system, responsible for processing inputs and controlling outputs. It reads data from the IR sensor and LDR, processes it based on programmed logic, and controls the traffic signals, projection unit, and LCD display.

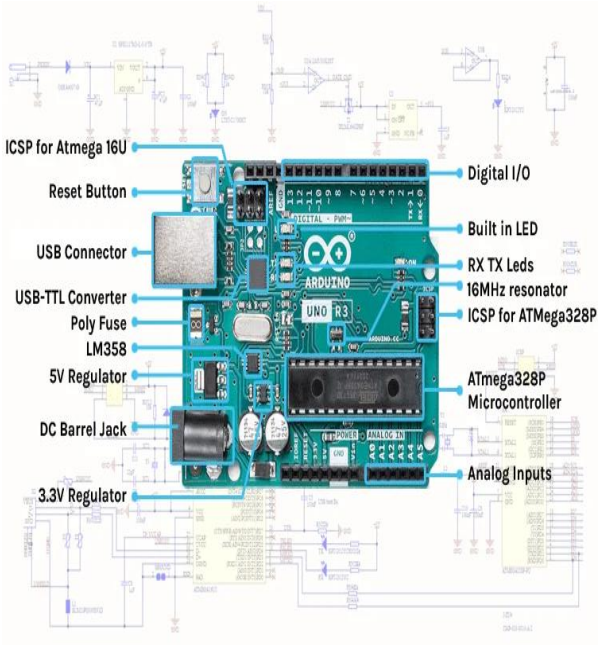

Key Features:

- Microcontroller: ATmega328P
- Operating Voltage: 5V
- Digital Pins: 14
- Analog Pins: 6

Role in the System:

- Reads sensor inputs
- Controls traffic signals
- Activates projection system
- Updates LCD display

Sensor Connections

The IR sensor and LDR sensor are used as input devices to detect traffic and environmental conditions.

IR Sensor:

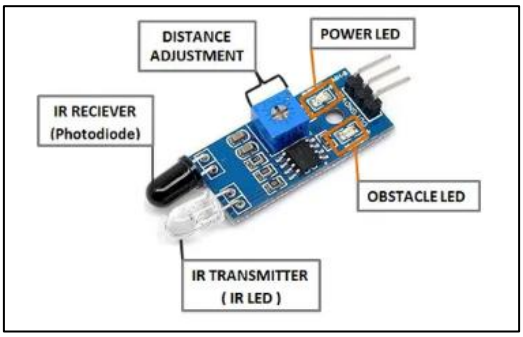

- OUT → D2
- VCC → 5V
- GND → GND
- Function: Detects vehicle presence (digital signal)

LDR Sensor (Analog):

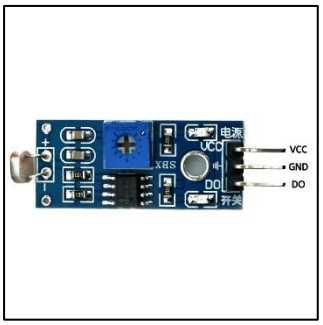

- One side → 5V
- Other side → A0
- 10kΩ resistor → A0 to GND (voltage divider)
- Function: Detects light intensity (analog value)

Traffic Signal LEDs

The traffic light system is implemented using three LEDs representing different signal states.

- Red LED → D3
- Yellow LED → D4
- Green LED → D5
- Each LED connected with a **220Ω resistor**

These LEDs simulate real-world traffic signals.

Projection Unit

The projection system represents the dynamic crosswalk feature of the project.

- Control pin → D6
- Uses transistor/MOSFET for switching
- Powered using external 5V supply

This ensures safe operation and prevents overloading the Arduino.

LCD Display (I2C Module)

The LCD is used for displaying system status and operates using I2C communication.

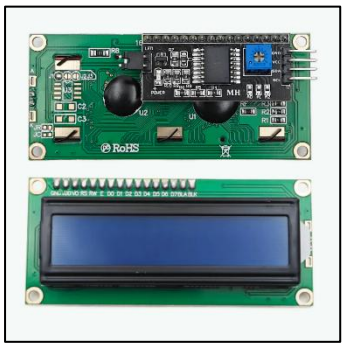

- VCC → 5V
- GND → GND
- SDA → A4
- SCL → A5

This reduces wiring complexity and improves efficiency.

3.3 System Architecture Design

The system follows the Input–Process–Output (IPO) model, which ensures a structured flow of data from sensors to outputs. The Arduino acts as the central unit that continuously processes incoming data and updates outputs accordingly.

The architecture can be summarized as follows:

- **Input Layer:** IR sensor and LDR sensor
- **Processing Layer:** Arduino Uno (decision-making unit)
- **Output Layer:** LEDs, projector, and LCD display

The system operates in a continuous loop, allowing real-time monitoring and dynamic response to changing conditions.

3.4 Control Logic and Working Algorithm

The working of the system is based on sensor inputs and conditional logic. The Arduino continuously reads sensor values and determines system behavior accordingly.

Step 1: Vehicle Detection (IR Sensor)

The IR sensor detects the presence of a vehicle based on infrared reflection.

- Detects object/vehicle (not light)
- When triggered → vehicle = TRUE

Step 2: Day/Night Detection (LDR Sensor)

The LDR sensor measures ambient light intensity.

- Reads analog value from A0
- Compared with threshold (~500)
- Determines:
    - DAY condition
    - NIGHT condition

Step 3: Traffic Signal Behavior

The system behaves differently depending on whether a vehicle is detected.

Case 1: No Vehicle Detected

The system maintains default traffic flow.

- Green LED → ON
- Yellow LED → OFF
- Red LED → OFF
- Projector → OFF

Case 2: Vehicle Detected

The system initiates a controlled signal transition.

- Green LED → OFF
- Yellow LED → ON (1 second delay)
- Yellow LED → OFF
- Red LED → ON

Step 4: Projection Control Logic

During the red signal phase, the system checks lighting conditions.

- If NIGHT → Projector ON
- If DAY → Projector OFF

Step 5: Continuous Loop Execution

The entire process repeats continuously.

- Ensures real-time response
- Updates outputs instantly

Important Code Settings

Certain parameters are defined in the code for flexibility.

- IR_ACTIVE_LOW = true → Defines IR sensor logic
- LDR_DARK_LOW = false → Defines LDR behavior
- nightThreshold = 500 → Determines day/night

These settings allow calibration based on sensor characteristics.

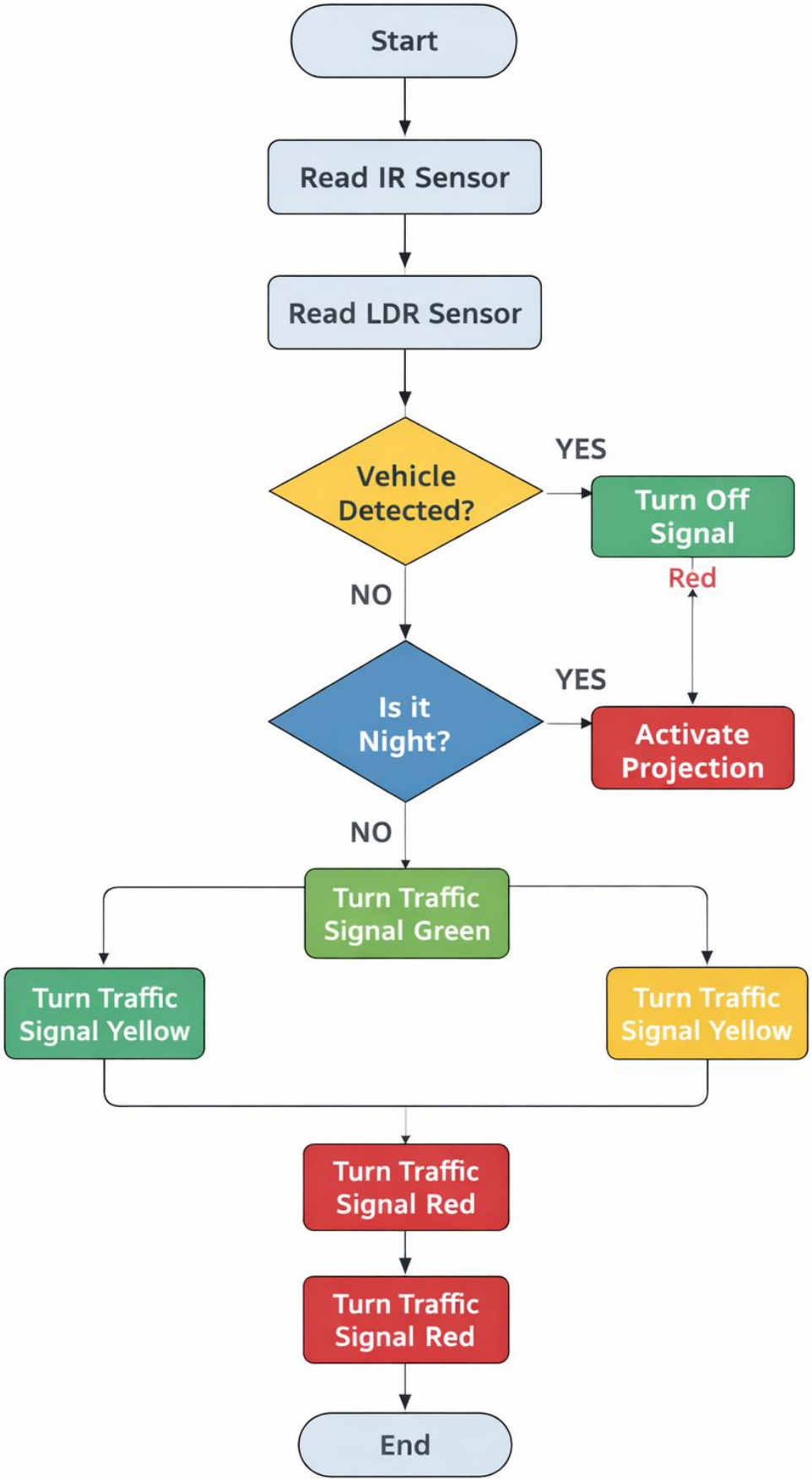
Start
Read IR Sensor
Read LDR Sensor
Vehicle Detected?
YES
Turn Off Signal
Red
NO
Is it Night?
YES
Activate Projection
NO
Turn Traffic Signal Green
Turn Traffic Signal Yellow
Turn Traffic Signal Yellow
Turn Traffic Signal Red
Turn Traffic Signal Red
End

3.5 System Operation and Performance Analysis

The system operates efficiently by responding dynamically to both traffic and environmental conditions. It ensures smooth traffic flow while improving pedestrian safety.

Operational Features

- Maintains green signal during normal conditions
- Provides smooth transition (Green → Yellow → Red)
- Activates projection only during night-time

Performance Characteristics

- Real-time processing with minimal delay
- Energy-efficient operation
- Reliable continuous loop execution
- Accurate sensor-based decision making

Power Requirement

The system requires moderate power for operation.

- Total current ≈ 200–800 mA
- 1A power supply is sufficient
- External supply required for projector

3.6 Display and Monitoring System

The system uses a 16×2 LCD display to provide real-time information about system status. This improves usability and allows easy monitoring.

LCD Output Format

Line 1:

- DAY V:YES
- NIGHT V:NO

Line 2:

- SIGNAL: GREEN
- SIGNAL: YELLOW
- SIGNAL: RED

Display Features

- Updates dynamically based on system state
- Shows real-time traffic condition
- Improves system transparency

3.7 System Functionality Summary

The proposed system successfully integrates multiple functionalities into a single platform, demonstrating the effectiveness of sensor-based traffic control.

Key Functions

- Vehicle detection using IR sensor
- Day/night detection using LDR
- Traffic signal automation
- Dynamic crosswalk projection
- LCD-based real-time display

CHAPTER – 4: PENDING WORK & FUTURE SCOPE

4.1 Limitations and Pending Work

The proposed system successfully demonstrates a prototype of an intelligent traffic management system using sensor-based automation and conditional control. It effectively integrates vehicle detection, environmental sensing, traffic signal control, and crosswalk projection. However, since the system is developed using basic hardware components and simplified logic, certain limitations exist that restrict its applicability in real-world large-scale environments.

The system currently operates in a controlled setup and is designed for demonstration purposes. Real-world traffic systems involve complex scenarios such as multiple vehicles, varying traffic densities, unpredictable pedestrian behaviour, and environmental disturbances, which are not fully addressed in the current model.

The key limitations and pending areas of improvement are discussed below:

- **Limited Vehicle Detection Capability:**
  The system uses a single IR sensor to detect vehicle presence. While it is effective for basic detection, it cannot differentiate between multiple vehicles, measure traffic density, or determine vehicle speed. This limits the system's ability to manage high-traffic scenarios efficiently.
- **Absence of Pedestrian Detection Mechanism:**
  The current system does not include sensors for detecting pedestrians. The crosswalk projection is activated based only on vehicle presence and lighting conditions, which may not accurately represent real pedestrian crossing requirements.
- **Simplified Projection System:**
  The crosswalk projection is implemented using a basic LED or small-scale projector. In real-world applications, a high-intensity and weather-resistant projection system would be required to ensure visibility under different conditions.
- **Environmental Dependency of Sensors:**
  The LDR sensor used for day/night detection is sensitive to environmental factors such as artificial lighting, shadows, fog, and weather conditions. This may lead to inaccurate classification of lighting conditions.
- **Lack of Multi-Lane and Multi-Directional Support:**
  The current model is designed for a single-lane traffic scenario. It does not support multiple lanes, intersections, or bidirectional traffic flow, which are common in real-world traffic systems.

- **No Communication Between Signals:**
  The system operates independently and does not communicate with other traffic signals. In modern traffic systems, coordination between signals is essential for reducing congestion and improving flow.
- **Fixed Rule-Based Logic:**
  The system uses predefined conditional logic for decision-making. It does not adapt dynamically to changing traffic patterns or learn from past data, which limits its intelligence.
- **Hardware Limitations:**
  The Arduino Uno has limited processing capability and memory, which restricts the implementation of advanced features such as image processing, machine learning, or real-time analytics.
- **Power Management Constraints:**
  The system relies on a stable power supply and does not include advanced power management techniques such as energy harvesting or backup systems.

These limitations indicate that while the system is effective as a prototype, further enhancements are required for practical deployment.

4.2 Future Scope

The proposed system provides a strong foundation for developing advanced intelligent transportation solutions. With the integration of modern technologies, it can be transformed into a fully functional smart traffic management system suitable for real-world implementation.

The future scope of this project includes the following enhancements:

- **Multi-Intersection Traffic Coordination:**
  The system can be extended to manage multiple traffic signals across different intersections. Synchronization between signals can reduce congestion and improve traffic flow efficiency.
- **Integration with Artificial Intelligence and Machine Learning:**
  AI-based algorithms can be implemented to analyse real-time traffic data, predict traffic patterns, and optimize signal timings dynamically.
- **Advanced Vehicle and Pedestrian Detection:**
  Computer vision techniques using cameras can replace IR sensors to detect vehicles, pedestrians, and traffic density with higher accuracy.
- **Real-World Crosswalk Projection System:**
  High-intensity laser or LED projection systems can be used to display clear and visible crosswalks on roads, ensuring safety even in adverse weather conditions.
- **IoT-Based Smart Traffic System:**
  The system can be connected to cloud platforms for real-time monitoring, data collection, and remote control. This enables centralized traffic management.
- **Vehicle-to-Infrastructure (V2I) Communication:**
  Future systems can communicate directly with vehicles to provide alerts, warnings, and navigation assistance, improving coordination and safety.
- **Energy-Efficient and Sustainable Design:**
  The system can be powered using solar energy and energy-efficient components to reduce power consumption and support sustainable development.
- **Integration with Smart City Infrastructure:**
  The system can be incorporated into larger smart city frameworks, enabling seamless integration with urban planning and traffic management systems.
- **Enhanced User Interface and Monitoring Systems:**
  Mobile applications or web dashboards can be developed for real-time monitoring and control of the traffic system.

CHAPTER – 5: CONCLUSION

5.1 Conclusion

The proposed project presents a functional and efficient implementation of an intelligent traffic management system that integrates sensor-based automation with dynamic crosswalk projection. The system successfully combines vehicle detection, environmental sensing, adaptive traffic signal control, and real-time monitoring into a unified embedded framework. By utilizing simple and cost-effective components such as an Arduino microcontroller, IR sensor, LDR sensor, LEDs, and an LCD display, the project demonstrates how modern traffic challenges can be addressed using basic embedded system techniques.

The system operates in real time by continuously monitoring sensor inputs and executing control logic to regulate traffic signals and activate the projection system when required. The inclusion of a night-based projection mechanism enhances pedestrian visibility, while the adaptive signal control ensures smoother traffic flow. Overall, the project serves as a practical prototype for intelligent transportation systems and smart city applications.

Key Accomplishments of the Project

The project achieves several important milestones in terms of design, implementation, and functionality. These accomplishments highlight the effectiveness of the proposed system:

- **Successful Integration of Hardware Components:**
  The system integrates multiple components, including IR sensor, LDR sensor, LEDs, LCD display, and projection unit, into a single working model controlled by the Arduino microcontroller.
- **Real-Time Sensor-Based Decision Making:**
  The system continuously reads sensor inputs and responds dynamically, demonstrating real-time processing and control.
- **Implementation of Adaptive Traffic Signal System:**
  The project successfully simulates real-world traffic signal behavior using a controlled transition sequence (Green → Yellow → Red), ensuring safe and orderly traffic movement.
- **Dynamic Crosswalk Projection Mechanism:**
  A key innovation of the project is the projection of a crosswalk during night-time conditions, which improves pedestrian visibility and safety.

- **Energy-Efficient Operation:**
  The projection system is activated only when required (i.e., during night and vehicle detection), reducing unnecessary power consumption.
- **User-Friendly Monitoring Interface:**
  The integration of an LCD display allows real-time monitoring of system status, including vehicle detection, lighting condition, and signal state.
- **Low-Cost and Scalable Design:**
  The use of affordable and easily available components makes the system suitable for further development and large-scale implementation.

Broader Impact and Significance

The proposed system holds significant importance in the context of modern transportation and smart city development. With the increasing number of vehicles and rising concerns about pedestrian safety, especially during night-time, there is a growing need for intelligent and adaptive traffic solutions.

The system contributes to improving road safety by enhancing visibility and reducing the risk of accidents at pedestrian crossings. The use of dynamic projection instead of static markings represents a shift toward more interactive and responsive infrastructure. Additionally, the adaptive traffic signal mechanism helps in reducing congestion and improving overall traffic efficiency.

The broader impact of the project can be understood through the following aspects:

- **Improved Pedestrian Safety:**
  The projected crosswalk provides clear visual guidance, reducing confusion and improving driver awareness during low-light conditions.
- **Efficient Traffic Management:**
  Sensor-based signal control ensures better traffic regulation compared to fixed-timing systems.
- **Foundation for Smart City Systems:**
  The project demonstrates key concepts such as automation, real-time processing, and sensor integration, which are essential for smart infrastructure.
- **Accessibility and Affordability:**
  The use of low-cost components makes the system feasible for implementation in developing regions.

- **Educational and Research Value:**
  The project provides a practical understanding of embedded systems, sensor integration, and intelligent control systems.

Final Recommendation

While the current system demonstrates a functional and innovative approach to traffic management, further improvements are recommended to enhance its performance and applicability in real-world scenarios.

- The system should be extended to support **multi-lane and multi-intersection traffic control** for better scalability.
- Advanced detection techniques such as **computer vision and AI-based analysis** should be incorporated for improved accuracy and decision-making.
- A **high-intensity projection system** should be implemented for real-world deployment to ensure visibility under different environmental conditions.
- Integration with **IoT platforms** can enable remote monitoring, data analysis, and centralized traffic management.
- More powerful hardware platforms such as **ESP32 or Raspberry Pi** can be used to support advanced functionalities.
- The system should be tested under real-world conditions to evaluate performance, reliability, and scalability.

In conclusion, the proposed intelligent traffic management system provides a strong foundation for future advancements in smart transportation. With further enhancements and integration of modern technologies, it has the potential to evolve into a fully functional, scalable, and efficient solution for improving urban mobility and pedestrian safety.

REFERENCES

[1] M. A. Hossain, M. R. Islam, and S. Ahmed, “Smart Pedestrian Crossing System Using Sensor-Based Technology,” *International Journal of Smart Transportation Systems*, vol. 5, no. 4, pp. 180–190, 2025.

[2] A. K. Sharma and P. Verma, “Design of Intelligent Pedestrian Crosswalk Using Embedded Systems,” *Proceedings of the International Conference on Advanced Traffic Control Systems*, 2024.

[3] S. Mekruksavanich and A. Jitpattanakul, “Smart Traffic Signal Control Using IoT and Machine Learning Techniques,” *Machine Learning and Knowledge Extraction*, vol. 5, no. 4, pp. 1937–1952, 2023.

[4] Z. Chen, G. Lu, Z. Xie, and W. Shang, “A Unified Framework for Intelligent Traffic Signal Control,” *IEEE Access*, vol. 8, pp. 20080–20092, 2020.

[5] R. Singh, V. Kumar, and T. Sontakke, “Projection-Based Communication Between Vehicles and Pedestrians,” *arXiv preprint arXiv:2403.06429*, 2024.

[6] S. Jahan et al., “AI-Based Traffic Management in Smart Cities: A Review,” *IEEE Access*, 2023.

[7] Propulsion Tech Journal, “Adaptive Traffic Signal Systems and Optimization,” [Online]. Available: https://www.propulsiontechjournal.com